TPCM 201610

Sample image

Order symbol : TPCM 201610

Product nr : 5824025

Description : Enclosure, PC, metric knock-outs

Remarks : Grey cover

EAN : 6418074087171

El. number :

- Finland : 3424396
- Denmark : 8212052233
- Sweden : 2508722

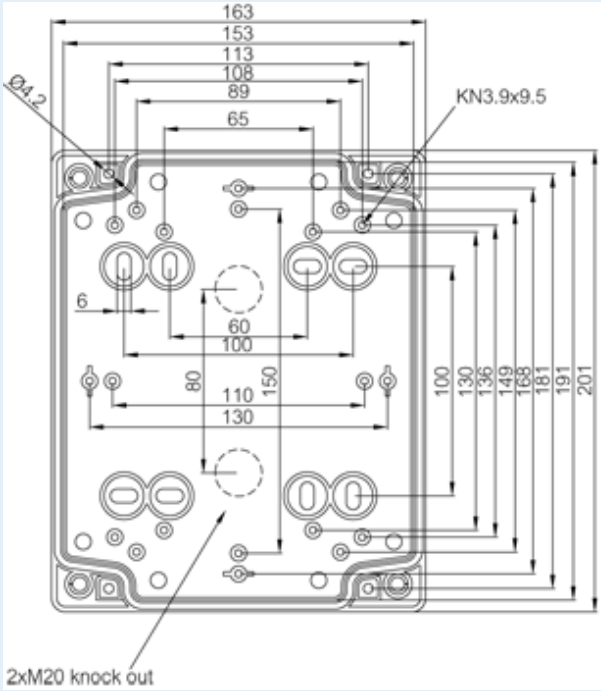

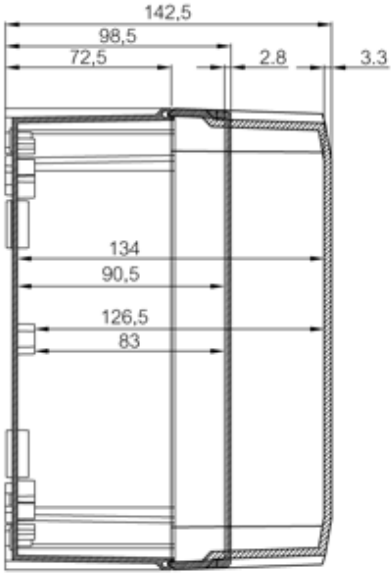

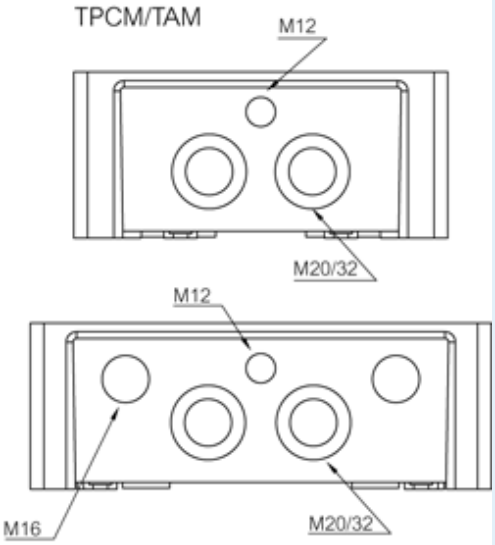

Dimensions :	**Height**	**Width**	**Depth**
mm :	201	163	99
inch :	7.91	6.42	3.9

Materials :

Material :	Polycarbonate
Base colour :	RAL_7035

Accessories :

ARH 2320	DIN-35 Mounting rail, for enclosures: (180 x 35 x 7)
MP 2016	Mounting plate, for enclosures: (155 x 140 x 1.5)
DH-3	DIN-35 Mounting rail, for enclosures: (140 x 35 x 7)
FP 10674	Wall fastening lug (2 pcs) incl. screws (40 x 88 x 14)

Cover colour :	RAL 7035 -light grey
Gasket material :	Polyurethane

Temperatures :

Temperature °C (continuous) :	-40 … 80
Temperature °F (continuous) :	-40 … 175

Ratings :

Ingress protection (EN 60529):	IP65;
Impact Resistance (EN 62262):	IK07; IK08;
electrical_insulation :	Totally insulated
Halogen free (DIN/VDE 0472, Part 815) :	Yes
UV resistance :	UL 746C
Flammability Rating :	UL 94 V0
Glow Wire Test (IEC 695-2-1) °C :	960C

Certificates :

Certificate FI 40343

© Fibox Oy, Data subject to change without notice (printed:)