PC 121609

Sample image

Order symbol : PC 121609

Product nr : 7032720

Description : Enclosure, PC

Remarks : Grey cover

EAN : 6418074003669

El. number :

- Finland : 3423436
- Denmark : 8212002801
- Sweden : 2536123

Including : Base with screws for mounting plate/DIN-rail. cover with PUR gasket and stainless steel cover screws.

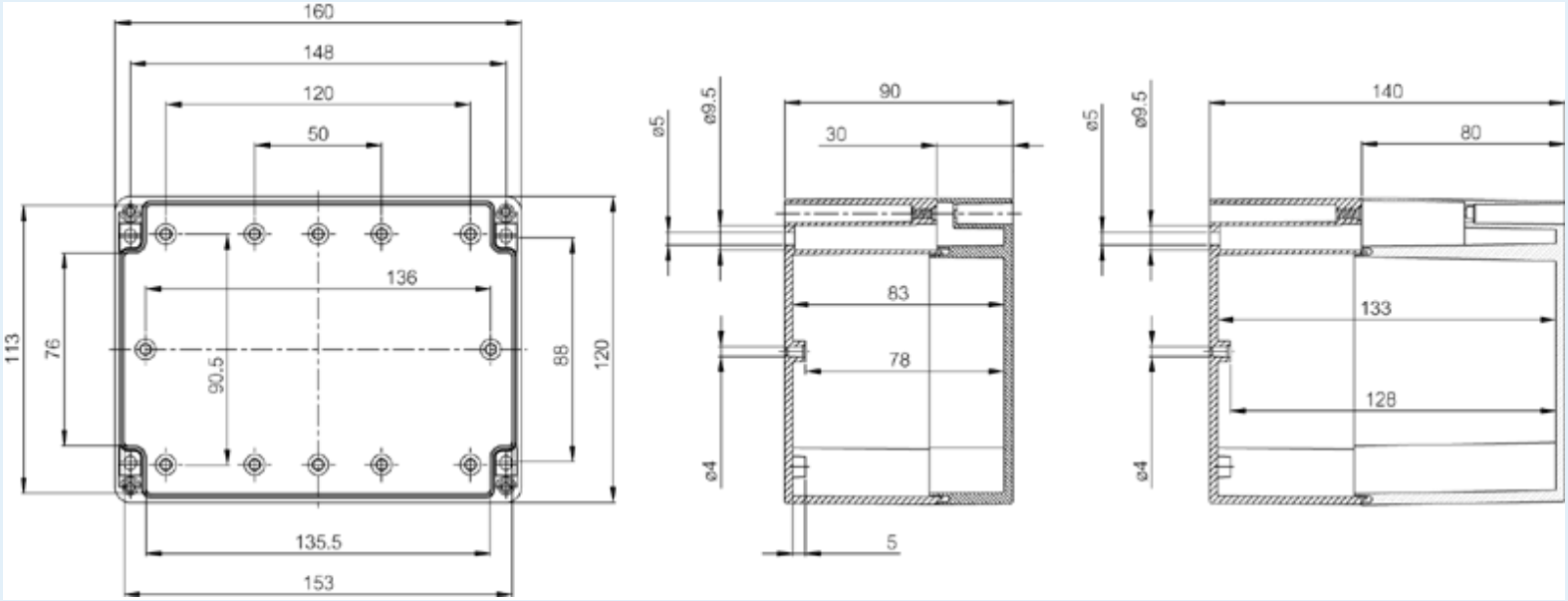

Dimensions :	**Height**	**Width**	**Depth**
mm :	120	160	90
inch :	4.72	6.3	3.54

Materials :

Material :	Polycarbonate
Base colour :	RAL_7035
Cover colour :	RAL 7035 -light grey
Gasket material :	Polyurethane

Accessories :

MIV 10	DIN-35 Mounting rail, for enclosures: (100 x 35 x 7)
TRH 1216	DIN-35 Mounting rail, for enclosures: (146 x 35 x 7)
TRM 0816	DIN-15 Mounting rail, for enclosures: (146 x 15 x 5)
TM 1216	Mounting plate, for enclosures: (111 x 134 x 1.5)
TH A	Grey plastic hinges (2 pcs) (30 x 20 x 12)

Temperatures :

Temperature °C (continuous) :	-40 … 80
Temperature °F (continuous) :	-40 … 175

Ratings :

Ingress protection (EN 60529):	IP66; IP67;
Impact Resistance (EN 62262):	IK07; IK08;
electrical_insulation :	Totally insulated
Halogen free (DIN/VDE 0472, Part 815) :	Yes
UV resistance :	UL 746C
Flammability Rating :	UL 94 V0
Glow Wire Test (IEC 695-2-1) °C :	960C

Certificates :

SGSFimko_EURONORD

© Fibox Oy, Data subject to change without notice (printed:)