CAB ABS 504020 G

Sample image

Order symbol : CAB ABS 504020 G

Product nr : 8183360

Description : Cabinet, ABS, Grey door

Remarks : Latches on the long side

EAN : 6418074020383

El. number :

- Finland : 3424320
- Denmark : 8212020566
- Sweden : 2540077

Including : Cabinet base. door with PUR gasket. latches. screws for mounting plate/ DIN-rail and corner plugs.

CAB 500x400x200

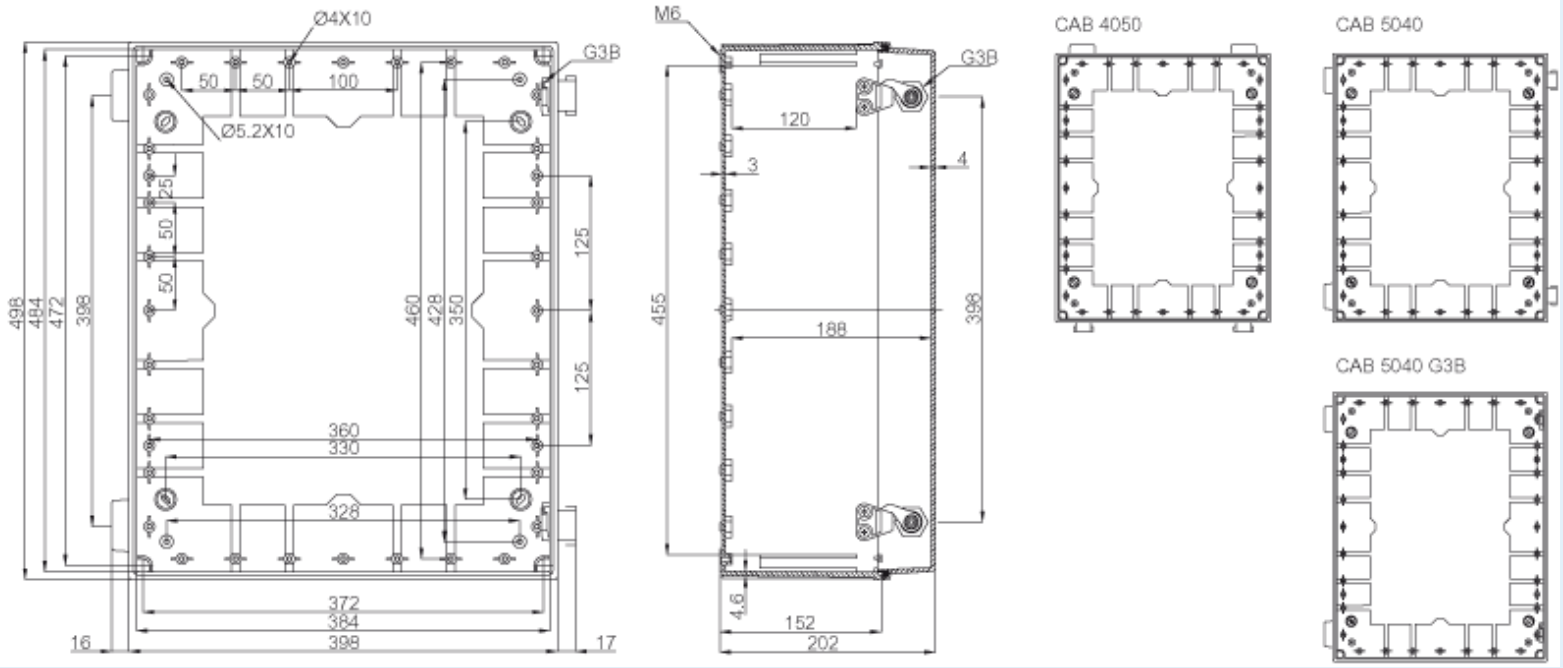

Dimensions :	**Height**	**Width**	**Depth**
mm :	500	400	200
inch :	19.69	15.75	7.87

Materials :

Material :	ABS
Base colour :	RAL_7035
Cover colour :	RAL 7035 -light grey
Gasket material :	Polyurethane

Ratings :

Ingress protection (EN 60529):	IP65;
Impact Resistance (EN 62262):	IK08;
electrical_insulation :	Totally insulated
Halogen free (DIN/VDE 0472, Part 815) :	Yes
UV resistance :	-
Flammability Rating :	UL 94 HB
Glow Wire Test (IEC 695-2-1) °C :	650C

Certificates :

Temperatures :

Temperature °C (continuous) :	-40 … 60
Temperature °F (continuous) :	-40 … 140

Certificate FI 40854

© Fibox Oy, Data subject to change without notice (printed:)