ABS F 85 G

Sample image

Order symbol : ABS F 85 G

Product nr : 8784312

Description : Enclosure, ABS

Remarks : Grey cover

EAN : 6418074002259

El. number :

- Finland : 3423465
- Denmark : 8212001954
- Sweden : 2536723

Including : Base with screws for mounting plate/DIN-rail. cover with PUR gasket and polyamide cover screws.

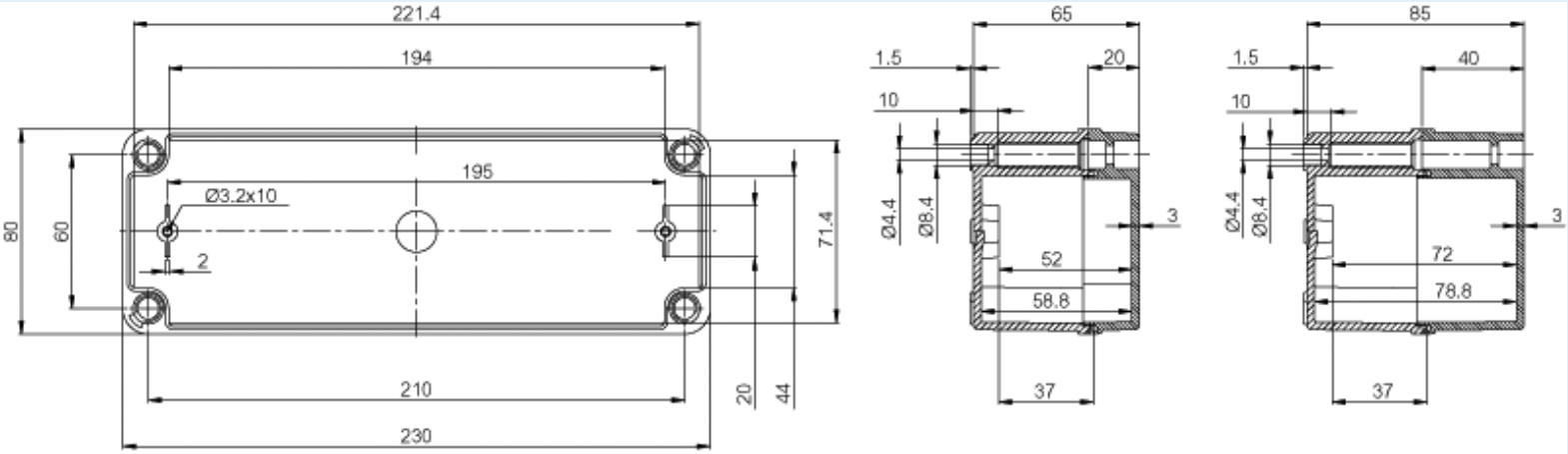

Dimensions :	**Height**	**Width**	**Depth**
mm :	230	80	85
inch :	9.06	3.15	3.35

Accessories :

F-MP	Mounting plate, for enclosures: (200 x 54 x 1.5)
FM-3	DIN-35 Mounting rail, for enclosures: (35 x 200 x 1.5)

Materials :

Material :	ABS
Base colour :	RAL_7035
Cover colour :	RAL 7035 -light grey
Gasket material :	Polyurethane

Temperatures :

Temperature °C (continuous) :	-40 … 60

Ratings :

Ingress protection (EN 60529):	IP66; IP67;
Impact Resistance (EN 62262):	IK08;
electrical_insulation :	Totally insulated
Halogen free (DIN/VDE 0472, Part 815) :	Yes
UV resistance :	-
Flammability Rating :	UL 94 HB
Glow Wire Test (IEC 695-2-1) °C :	650C

Temperature °F (continuous) :	-40 … 140

Certificates :

SGSFIMKO_PICC_pc

© Fibox Oy, Data subject to change without notice (printed:)